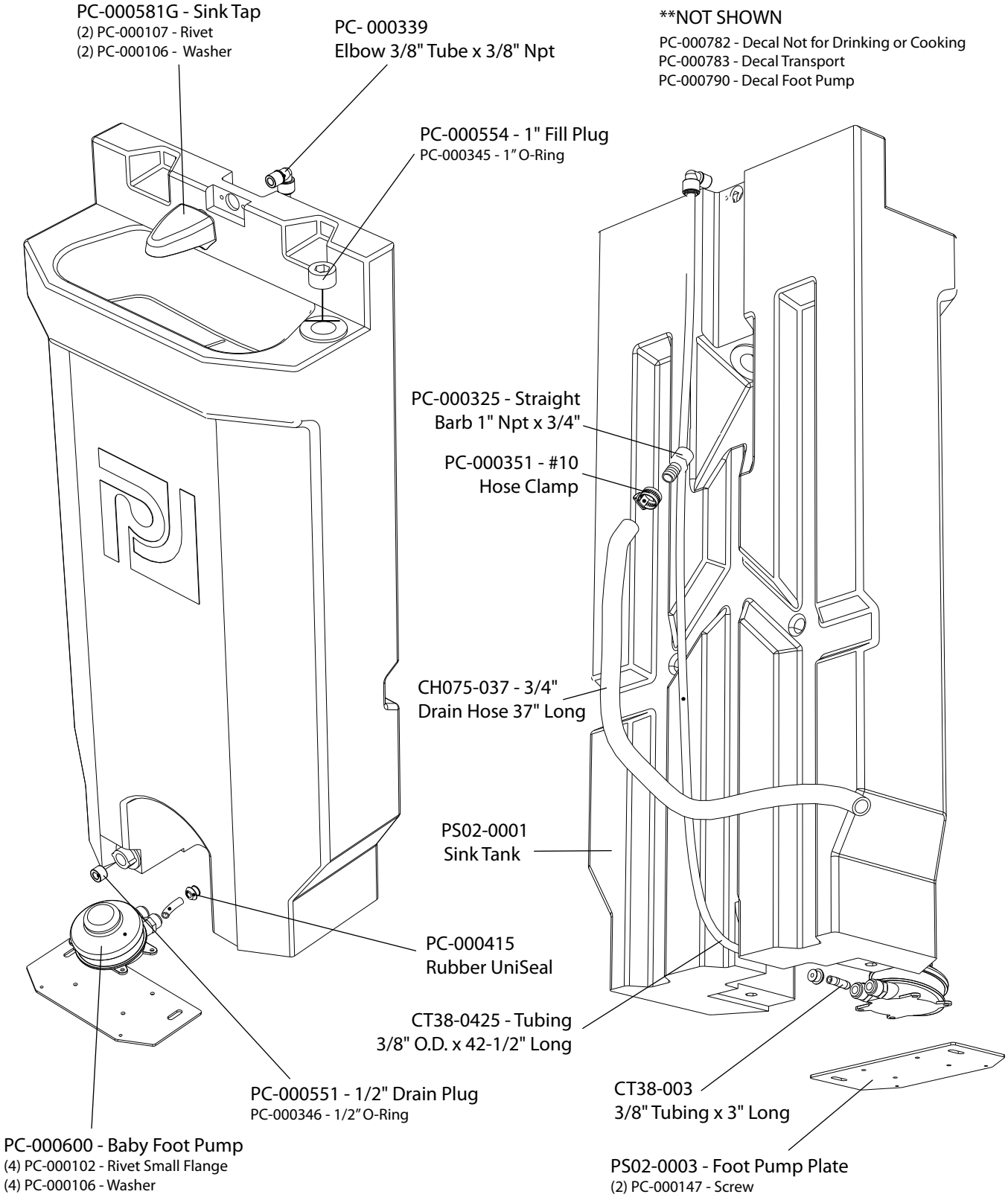PS02-1000 Exploded View