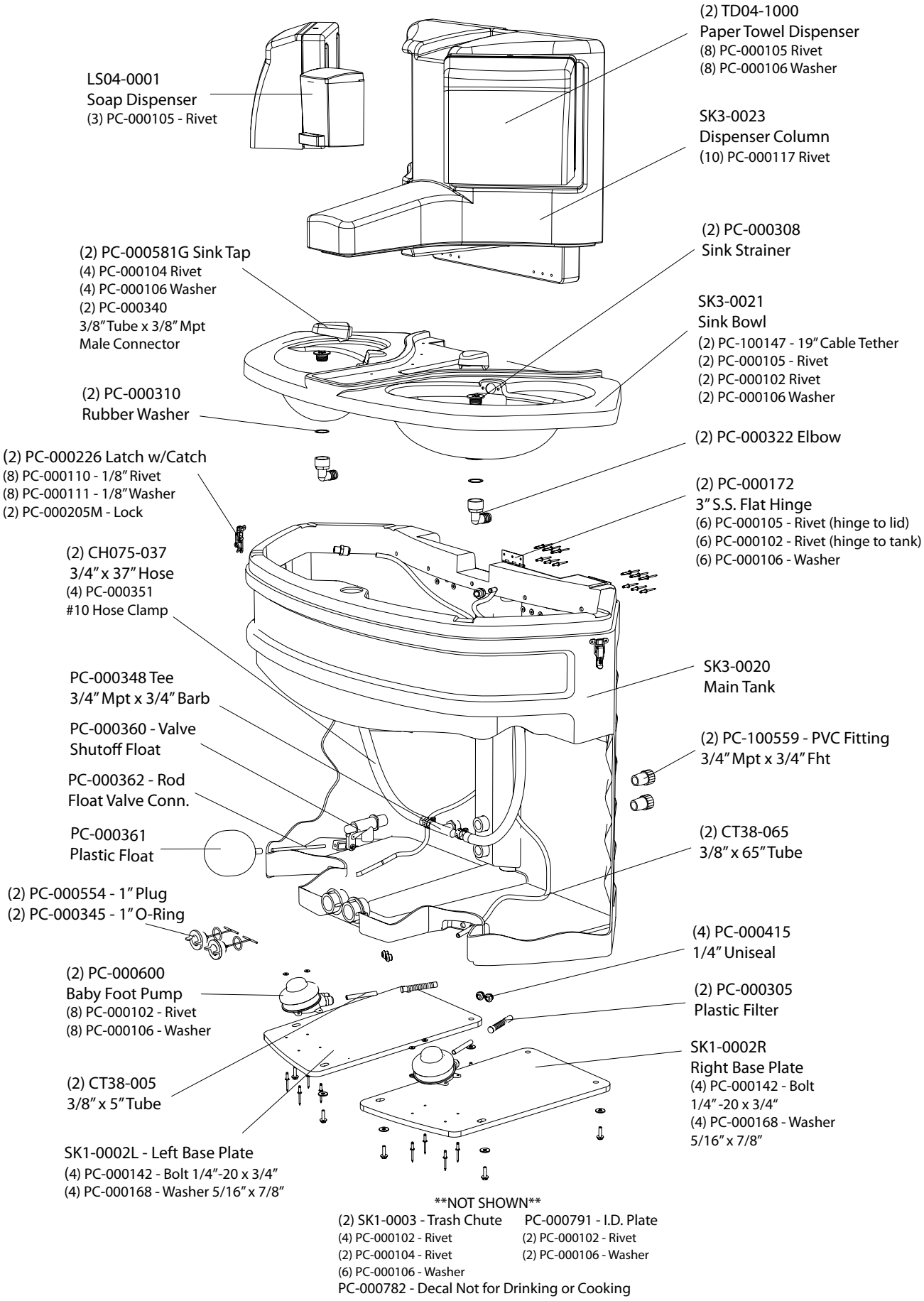

NOT SHOWN

(2) SK1-0003 - Trash Chute
(4) PC-000102 - Rivet
(2) PC-000104 - Rivet
(6) PC-000106 - Washer

PC-000791 - I.D. Plate
(2) PC-000102 - Rivet
(2) PC-000106 - Washer

PC-000782 - Decal Not for Drinking or Cooking